SUBMITTAL DATA

Job Name	Casper College RF-1 Replacement
For	
Sold To	
Prepared For	
Customer PO#	
Prepared By	
Date	

Table of Contents

Daikin Section Divider 3

Technical Data Sheet - AHU-1 4

Fan Curve - AHU-1 7

Drawing - AHU-1 8

Air Handler PerfectPleat HC M8 2 inch 15

Air Handler Magnehelic D.P. Gauge 16

Daikin Section Divider

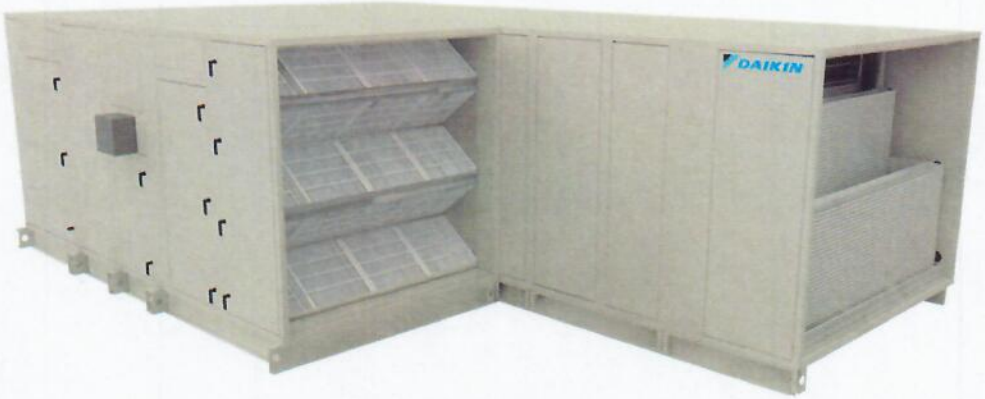

AHU-1

Technical Data Sheet

Job Information	Technical Data Sheet
Job Name	Casper College RF-1 Replacement
Date	
Submitted By	
Software Version	13.03
Unit Tag	AHU-1

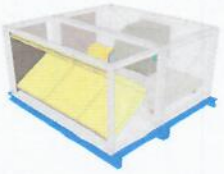

Unit Overview

Model Number	Supply					
	Air Volume cfm	Static Pressure		External Dimensions		
		External inWc	Total inWc	Height in	Width in	Length in
CAH012GVAM	7900	3.10	3.68	36*	72*	72

**Not including base rails, coil connectors, drain connectors and control boxes.*

Unit

Model Number:	CAH012GVAM		
Approval:	ETL Listed / ETL Listed to Canadian Safety Standards (ETL Label / ETLc Label)		
Outer Panel:	24 gauge G90 Galvanized Steel (unpainted)		
Liner:	24 gauge Galvanized Steel (unless noted per section)		
Insulation:	R-13 Injected Foam		
Unit Configuration:	Inline horizontal	**Drive (Handling) Location:**	Left
Base:	4" formed channel	**Wall Thickness:**	2 in
Altitude:	5200 ft	**Parts Warranty:**	Standard One Year

Panel Filter	Component: 1	Length: 30 in	Shipping Section: 1

Type	Efficiency	Face Velocity	Face Area	Air Volume	Filter Loading
Pleated	MERV 8	368 ft/min	21.5 ft²	7900 cfm	Side

Air Pressure Drop				Number of Filters	Height	Width	Depth
Clean Air	Mean Air	Dirty Air	User Spec				
0.15 inWc	**0.58** inWc	1.00 inWc	N/A	4	24 in	24 in	2 in
				2	24 in	20 in	2 in

Door		
Location	**Width**	**Opening**
Drive side	26 in	Outward

Special Options	
Sound Baffle	**Filter Gauge**
(As casing details)	Magnehelic 0-2"

Supply Fan

Component: 2 | Length: 42 in | Shipping Section: 2

Fan Performance

Air Volume	Static Pressure			Fan Energy Index(FEI)	Total Input Power	Fan Shaft Power	Speed		Outlet Velocity
	External	Total	Cabinet				Operating	Maximum	
7900 cfm	3.10 inWc	3.68 inWc	0.00 inWc	0.95	7.8 kW	8.44 BHP	1479 rpm	1725 rpm	3816 ft/min

Fan Data

Fan Type	Blade Type / Class	Quantity of Fans	Wheel Diameter	Number of Blades	Discharge	Motor Location
Centrifugal DWDI	Forward Curved / 2	1	15.00 in	N/A	Top horizontal	To Side of Fan

Motor Data

Power	Electrical Supply	Speed	Efficiency	Enclosure	Frame Size	Supplier	Number of Poles	Lock Rotor Current	Full Load Current
10.0 HP	460/60/3 V/Hz/Phase	1750 rpm	Premium	ODP	215 T frame	Generic	4	84.04 A	12.50 A

Fan Options

Shaft Grounding Kit:	Provided	Isolator Type:	Spring

Drive Package Data*

Fan Sheave	Motor Sheave	Belt	Number of Belts	Actual Drive S.F.	Bearing Type
2AK74H	2AK64H	A39	2	1.30	Standard - L50 (200K)

**Daikin Applied reserves the right to provide a different but equivalent drive package*

VFD/Starter/Disconnect Data

Selection Type:	External J-Box	Vendor:	Factory Standard
Voltage:	460 v	Height x Width x Depth:	6.00 in x 6.00 in x 4.00 in
Mounting:	Door Side	Enclosure:	NEMA 1

Door

Location	Width	Opening
Drive side	26 in	Outward

Special Options

Sound Baffle

(As casing details)

Special Text

Extra belts 1 set(s)

Unit Sound Power (dB)

Type	63 Hz	125 Hz	250 Hz	500 Hz	1000 Hz	2000 Hz	4000 Hz	8000 Hz
Radiated:	80	82	74	69	66	56	46	51
Unit Discharge:	90	92	92	90	88	84	84	79
Unit Return:	86	88	88	86	84	80	80	75

Shipping Section Details

Section	Length in	Weight lb	Corner Weights (lb)				Center of Gravity (in)		
			P1	P2	P3	P4	XX	YY	ZZ
1	30	303	70	70	82	82	16	36	18
2	42	755	246	160	132	218	19	28	17
Entire Unit	**72**	**1058**	**279**	**193**	**251**	**336**	**40**	**30**	**17**

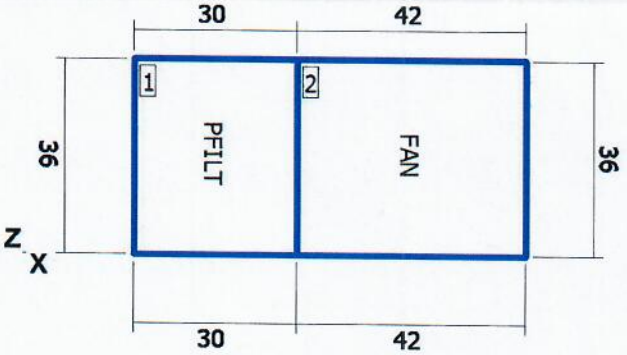

Elevation View

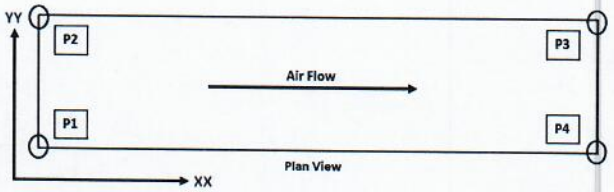

NOTE: Special components aren't included in the corner weights and center of gravity data.

Supply Static Pressure Drop

Component	Option	Static Pressure Drop
Panel Filter	Panel Filter	0.58 insWg
Supply Fan	Cabinet	
External Static	External Static	3.10 insWg
Total Supply Fan Static		3.68 insWg

AHRI Certification

Certified in accordance with the AHRI Central Station Air-Handling Unit Certification Program, which is based on AHRI Standards 430/431. Certified units may be found in the AHRI Directory at www.ahridirectory.org.

Notes

Standard

1. As a standalone component, unit meets or exceeds requirements of ASHRAE 90.1 - 2007. The approving authority is responsible for compliance of multi - component building systems.

Daikin AHU Fan Curve

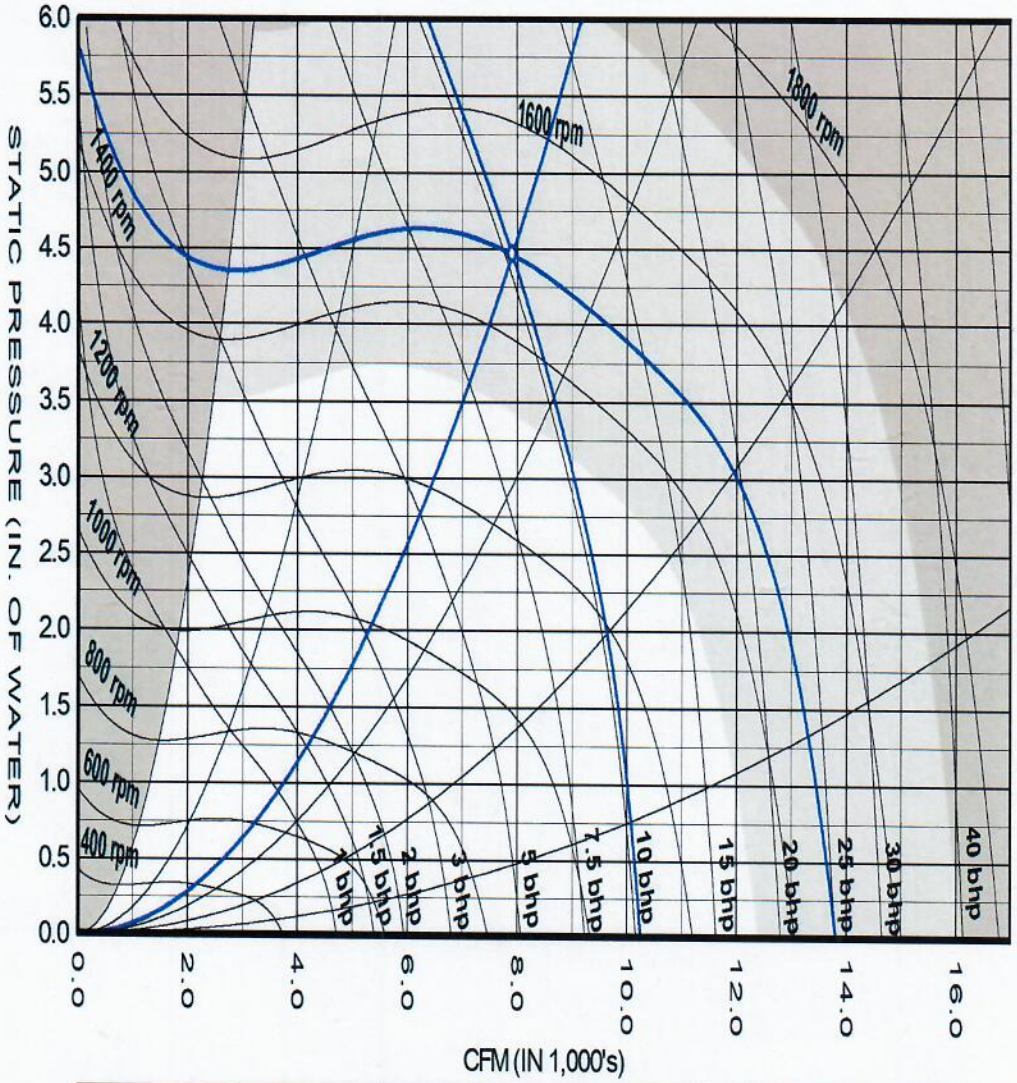

15.00" Forward Curved Supply Fan at Standard Conditions					
Air volume	7900	cfm	Fan speed	1479	rpm
Total static	4.46	insWg	Max speed	1725	rpm
Fan Shaft Power	10.2	bhp	Efficiency	54.1	%
Fan Energy Index(FEI)	0.95				

Unit tagging	AHU-1	Date	December-21-2022
Job name	Casper College RF-1 Replacement	Time	13:57

Supply fan performance is certified in accordance with the Central Station Air-Handling Unit Certification Program, which is based on AHRI Standard 430.

AHU-1

Drawing

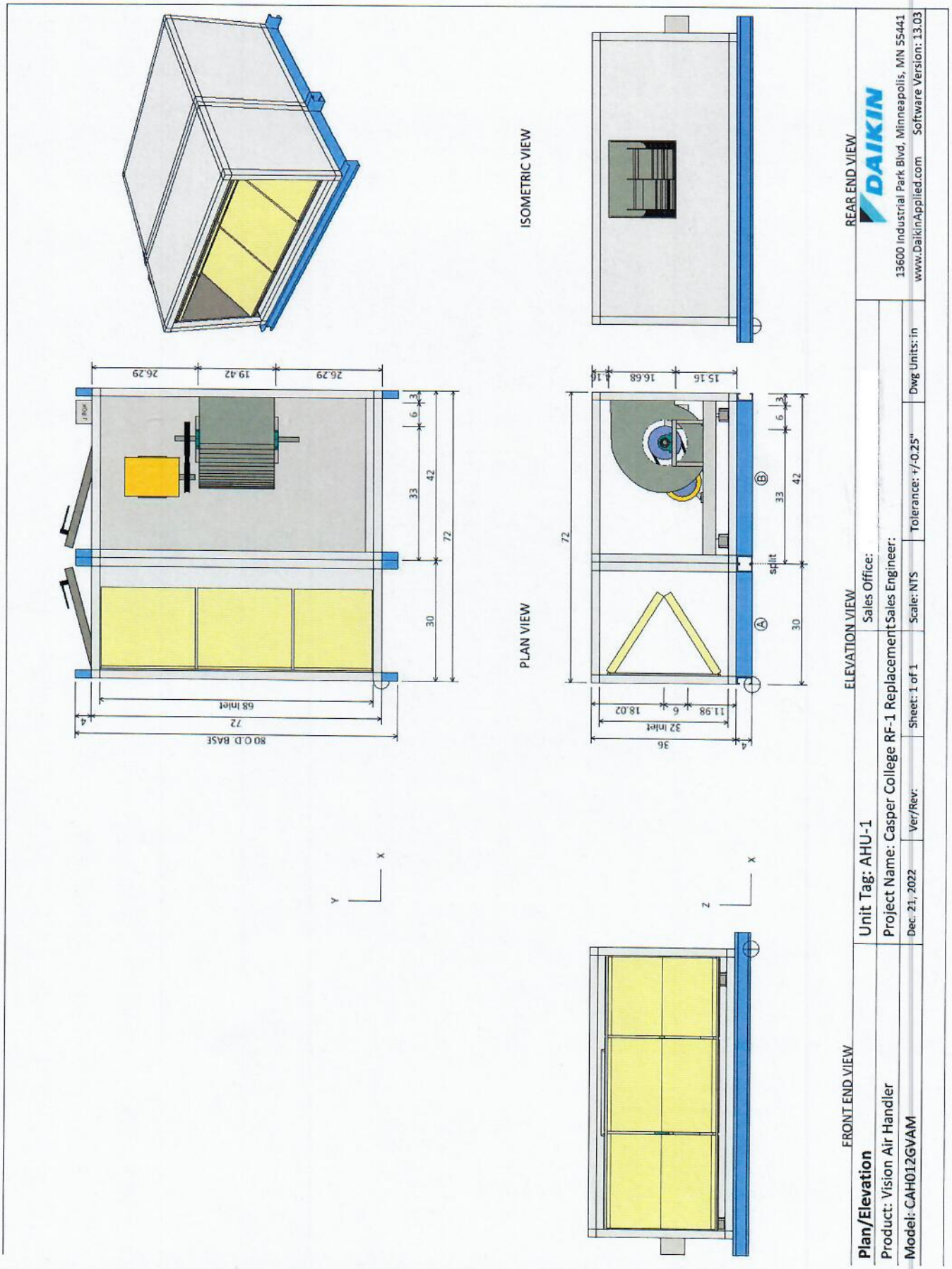

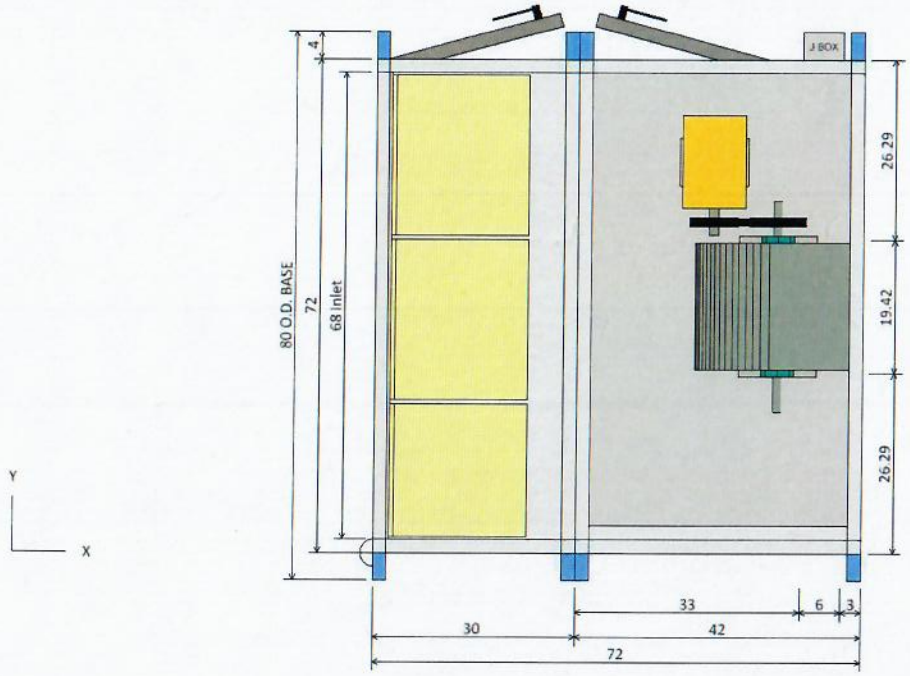

PLAN VIEW

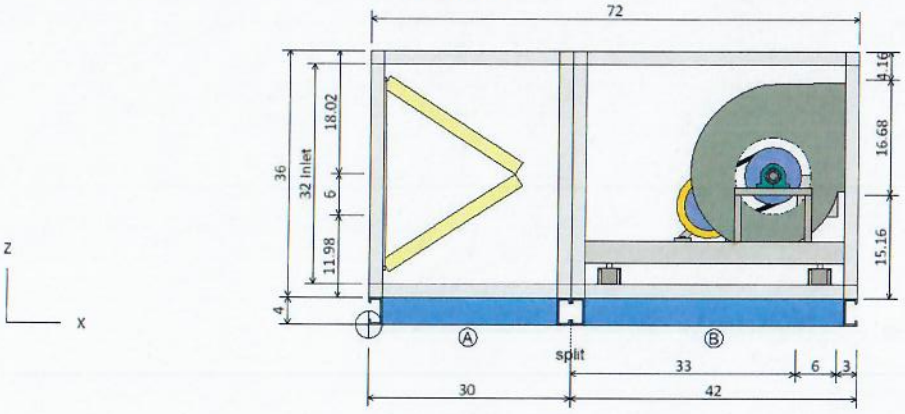

ELEVATION VIEW

Component Key		
Ⓐ	Panel Filter	
	Filter Type:	Pleated (MERV 8)
	Left Door (WxH):	26 ins x 32 ins
Ⓑ	Supply Fan	
	Fan Type:	Centrifugal DWDI
	Fan Size (Class):	15 (2)
	Air Flowrate:	7900.0 cfm
	T.S.P:	3.7 insWg
	Motor Power:	10.0 HP
	Left Door (WxH):	26 ins x 32 ins

Plan/Elevation - No Ends	Unit Tag: AHU-1					
Product: Vision Air Handler	Project Name: Casper College RF-1 Replacement			Sales Engineer:		
Model: CAH012GVAM	Dec. 21, 2022	Ver/Rev:	Sheet: 1 of 1	Scale: NTS	Tolerance: +/-0.25"	Dwg Units: in

DAIKIN
13600 Industrial Park Blvd, Minneapolis, MN 55441
www.DaikinApplied.com Software Version: 13.03

AHU-1

Drawing

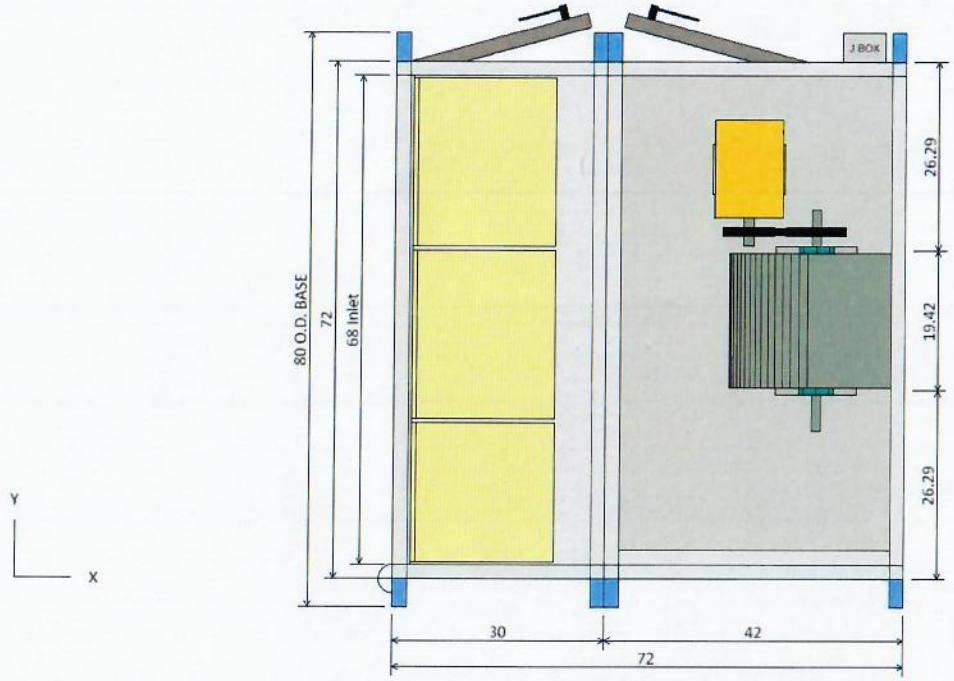

PLAN VIEW

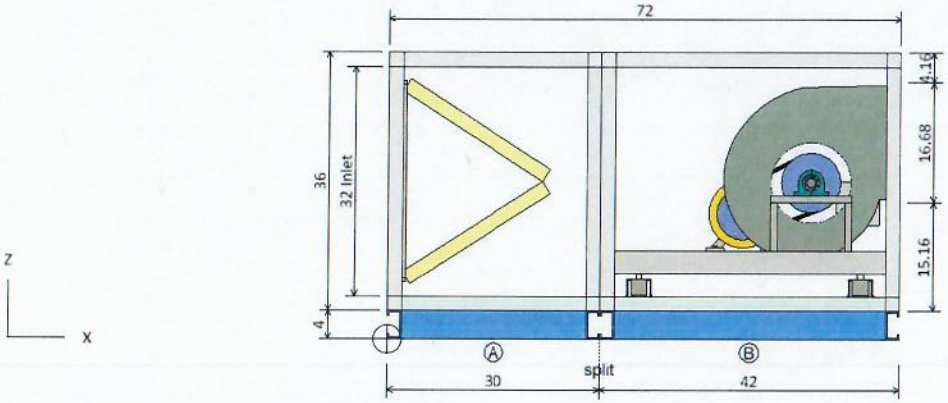

ELEVATION VIEW

Component Key						
	Type	X	Y	Z	Wid	Hgt
Ⓐ	Panel Filter Opening	0.00	2.00	6.00	68.00	32.00
Ⓑ	Supply Fan Fan Discharge	72.00	26.29	19.16	19.42	16.68

Note: Dimensions are measured from the origin point.

Opening/Damper Connections	Unit Tag: AHU-1			Sales Office:			DAIKIN
Product: Vision Air Handler	Project Name: Casper College RF-1 Replacement			Sales Engineer:			13600 Industrial Park Blvd, Minneapolis, MN 55441
Model: CAH012GVAM	Dec. 21, 2022	Ver/Rev:	Sheet: 1 of 1	Scale: NTS	Tolerance: +/-0.25"	Dwg Units: in	www.DaikinApplied.com Software Version: 13.03

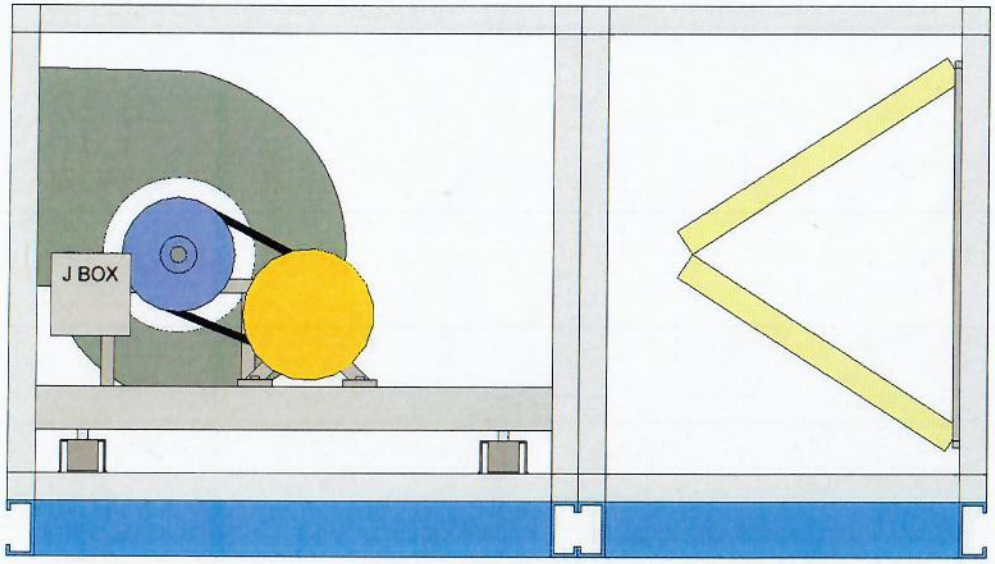

LEFT ELEVATION VIEW

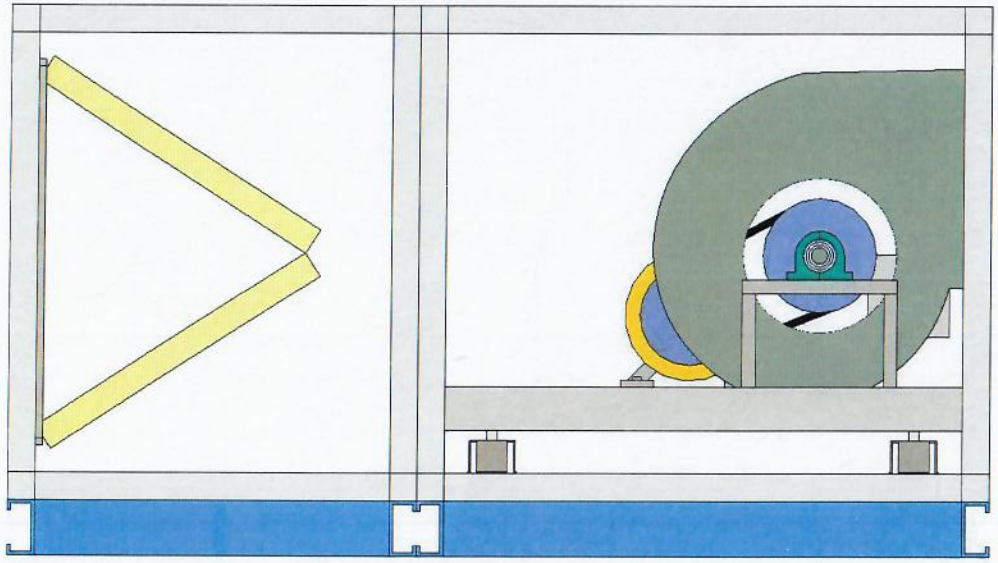

RIGHT ELEVATION VIEW

Coil and Drain Connections

Note: Dimensions are measured from the origin point.

Coil and Drain Connections	Unit Tag: AHU-1			Sales Office		
Product: Vision Air Handler	Project Name: Casper College RF-1 Replacement			Sales Engineer:		
Model: CAH012GVAM	Dec. 21, 2022	Ver/Rev:	Sheet: 1 of 1	Scale: NTS	Tolerance: +/-0.25"	Dwg Units: in

DAIKIN
13600 Industrial Park Blvd, Minneapolis, MN 55441
www.DaikinApplied.com Software Version: 13.03

AHU-1

Drawing

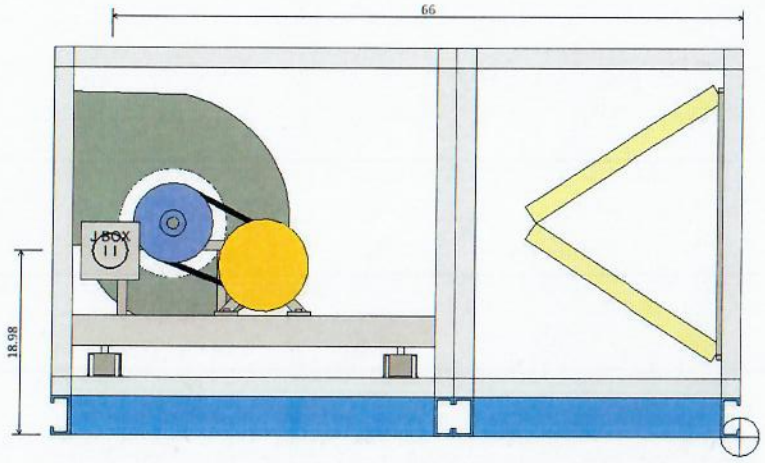

LEFT ELEVATION VIEW

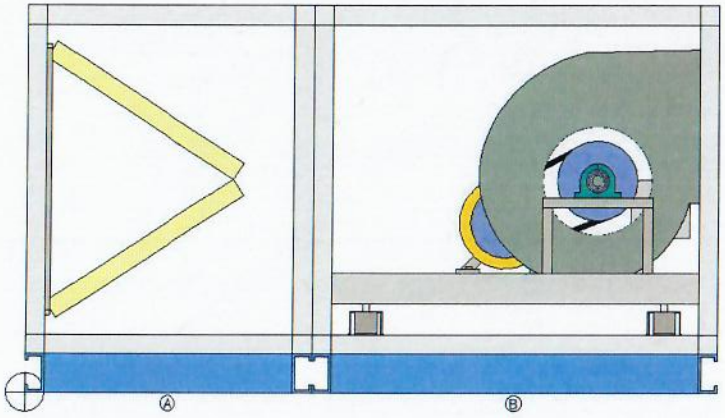

RIGHT ELEVATION VIEW

z
x

Component Key

	Type	X	Y	Z	Volts	Phase
Ⓑ	Supply Fan Fan	66.00	72.00	18.98	460	3

Note: Dimensions are measured from the origin point.

Electrical Connections	Unit Tag: AHU-1			Sales Office:		
Product: Vision Air Handler	Project Name: Casper College RF-1 Replacement			Sales Engineer:		
Model: CAH012GVAM	Dec. 21, 2022	Ver/Rev:	Sheet: 1 of 1	Scale: NTS	Tolerance: +/-0.25"	Dwg Units: in

DAIKIN
13600 Industrial Park Blvd, Minneapolis, MN 55441
www.DaikinApplied.com Software Version: 13.03

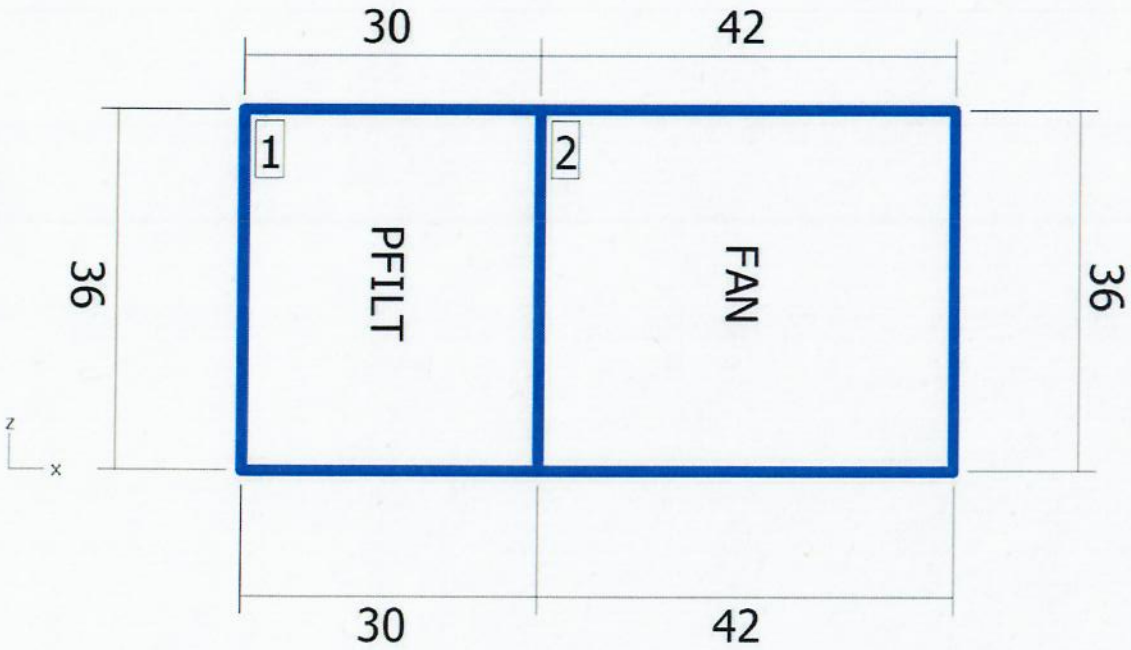

Elevation View

Shipping Sections

Section	Weight (lb)	X	Y	Z
Section 1	302.96	30	72	36
Section 2	755.45	42	72	36
Total Unit	1058.41	72	72	36

Note: Base rails, curb ready base, coil connectors, drain connectors, and control boxes not included in height X, Y, Z dimensions. Shipping section may be 2" longer in air flow direction due to internal splice joint.

Shipping Sections	Unit Tag: AHU-1			Sales Office:		
Product: Vision Air Handler	Project Name: Casper College RF-1 Replacement			Sales Engineer:		
Model: CAH012GVAM	Dec. 21, 2022	Ver/Rev:	Sheet: 1 of 1	Scale: NTS	Tolerance: +/-0.25"	Dwg Units: in

DAIKIN
13600 Industrial Park Blvd, Minneapolis, MN 55441
www.DaikinApplied.com Software Version: 13.03

AHU-1

Drawing

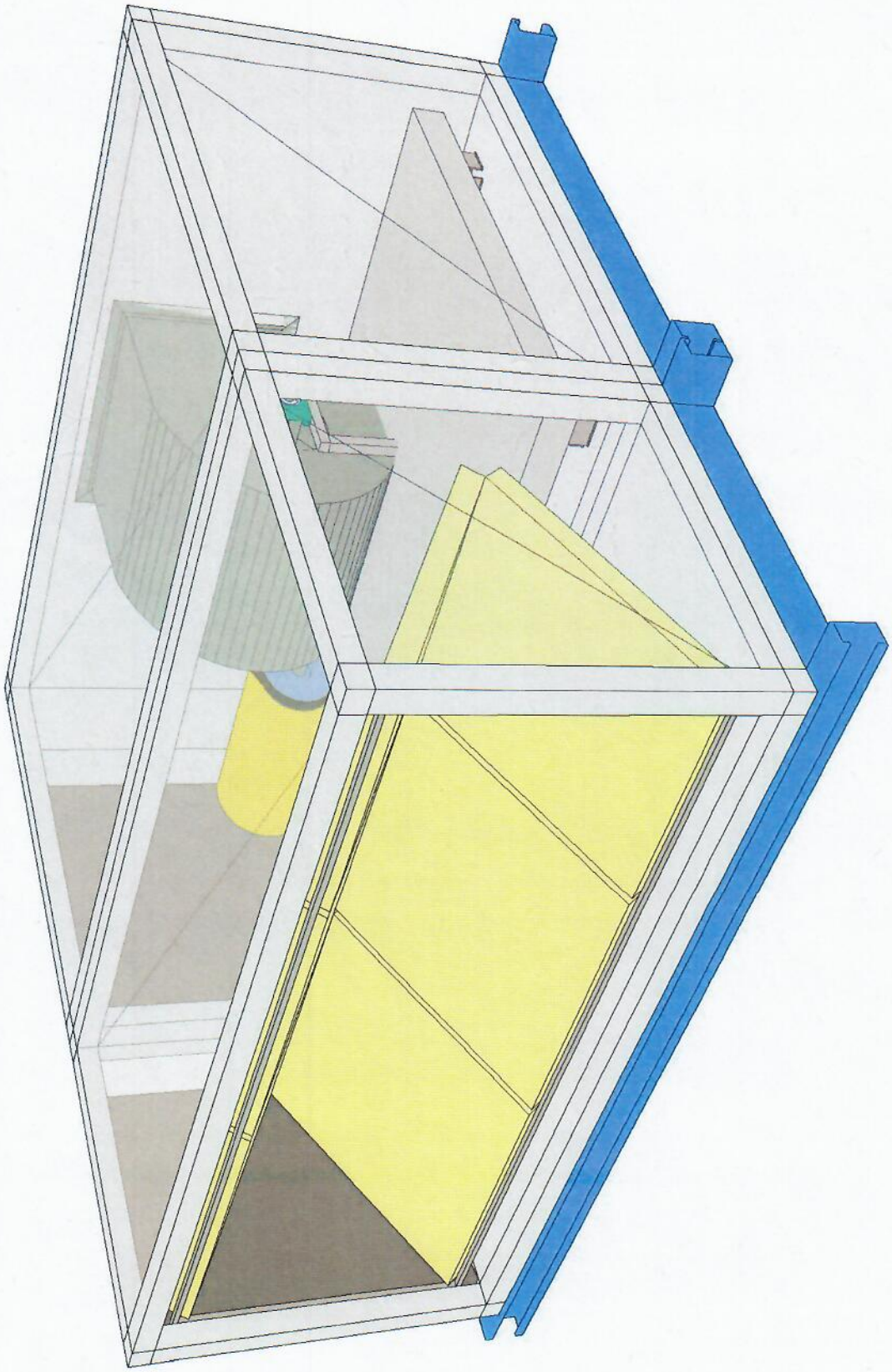

Product Drawing	Unit Tag: AHU-1	Sales Office:	DAIKIN
Product: Vision Air Handler	Project Name: Casper College RF-1 Replacement	Sales Engineer:	13600 Industrial Park Blvd, Minneapolis, MN 55441
Model: CAH012GVAM	Dec. 21, 2022 / Ver/Rev: / Sheet: 1 of 1	Scale: NTS / Tolerance: +/-0.25" / Dwg Units: in	www.DaikinApplied.com / Software Version: 13.03

DAIKIN

AAF | Flanders

PerfectPleat® HC M8 2" Filter

Description

The PerfectPleat HC M8 filter is designed to consistently increase efficiency throughout the service life of the filter. The PerfectPleat HC M8 filter is ideal for applications where pleated filters are currently used and higher performance is desired. It has an initial MERV 8 rating and the efficiency increases significantly when dust holding begins. PerfectPleat HC M8 filters have distinctive self-supporting characteristics that allow a pleating pattern, which promotes airflow and maximizes dust holding capacity (DHC). Lower pressure drop and higher DHC translate to reductions in energy consumption and operating costs.

Support straps on the air-entering side are used in combination with uniquely designed pleat stabilizers on the air-leaving side of this 2" filter to provide additional strength. The support straps and pleat stabilizers ensure integrity against turbulent airflow. The 2" filter resists crushing and abuse and provides excellent lateral stability for installation in side-access systems.

Performance Data

PerfectPleat HC M8 2" Filter		
Pleats per lineal foot		15.0
Rated initial resistance (in. W.g.)	330 fpm	0.12
	500 fpm	0.23
	625 fpm	0.31
Recommended final resistance (in. W.g.)		1.0
MERV		8.0
Continuous operating temperature limits		150°F (66°C)

Composite Minimum Efficiency Curve

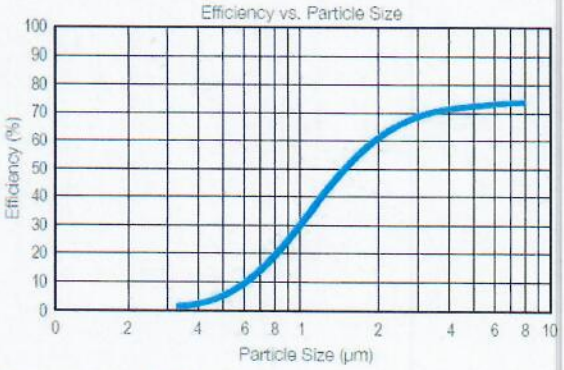

Tested in accordance with ASHRAE Standard 52.2.

Initial Resistance vs. Filter Face Velocity

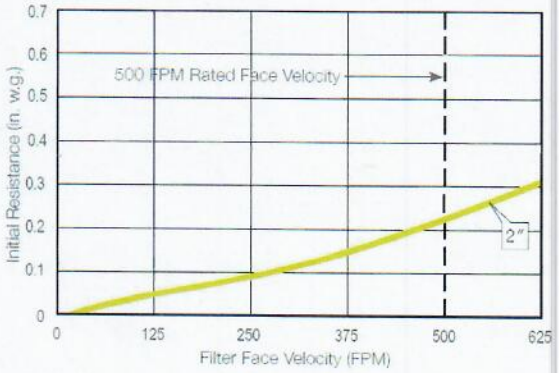

Daikin Applied reserves the right to alter, amend, modify, or change any product manufacture including, but not limited to, its designs, images or specifications at any time without notice, recourse, or remedy from the Owner, Contractor, or Buyer.

©2019 Daikin Applied | (800) 432-1342 | www.DaikinApplied.com

Magnehelic® Differential Pressure Gauge

Description

Dwyer's simple, frictionless Magnehelic® Gauge movement quickly indicates air or noncorrosive gas pressures--either positive, negative (vacuum) or differential. The design resists shock, vibration, over-pressures, and is weatherproof to IP67.

Features

- Offered in 0 – 1", 0 – 2", 0 – 3", and 0 – 5" measurements
- Easy to read gauge through undistorted plastic face permits viewing from far away
- Patented design provides quick response to pressure changes, meaning no delay in assessing critical situations
- Durable housing and high-quality components combine to provide long service life and minimized down-time
- Pointer stops of molded rubber prevent pointer over-travel without damage
- Jeweled bearings are shock-resistant mounted, providing virtually frictionless motion for the helix
- Motion is damped with high viscosity silicone fluid
- Zero adjustment screw is located in the plastic cover and can be accessed without removing the cover
- Diecast aluminum case is precision made and iridite-dipped to withstand a 168 hour salt spray corrosion test
- Overpressure protection blowout plug is comprised of a rubber plug on the rear which functions as a relief valve by unseating and venting the gauge interior when over pressure reaches approximately 25 psig (1.7 bar)
- O-ring seal for cover assures pressure integrity of case
- Samarium Cobalt magnet mounted at one end of range spring rotates helix without mechanical linkages

Magnehelic® Differential Pressure Gauge (0 - 1" model shown)

Dimensions

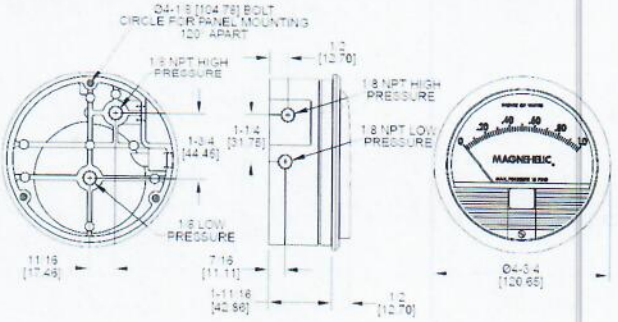

Daikin Applied reserves the right to alter, amend, modify, or change any product manufacture including, but not limited to, its designs, images or specifications at any time without notice, recourse, or remedy from the Owner, Contractor, or Buyer.

©2019 Daikin Applied | (800) 432-1342 | www.DaikinApplied.com